THE SHAFT BRAKING SYSTEM

MANUAL

VERSION: A2

DATE: SEPT**, 2021**

Safety illustration:

[1] It is forbidden for non-professional personnel to operate the machine.

[2] Before installation, usage and maintenance, read this instruction manual carefully().3.chis 3(he)11(m)15(m34o35)57(c

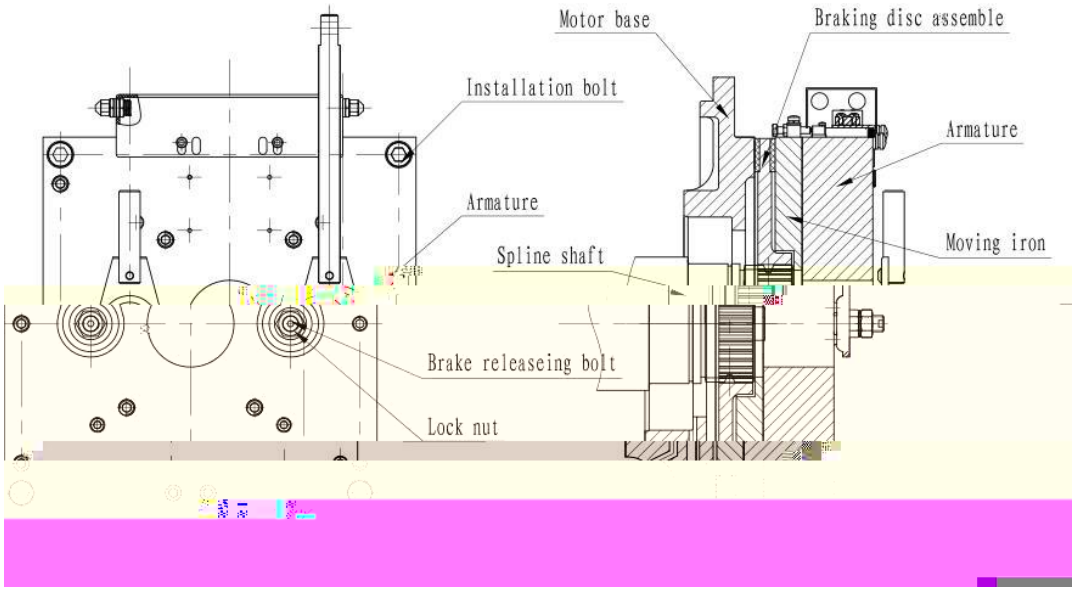

Figure 1.1

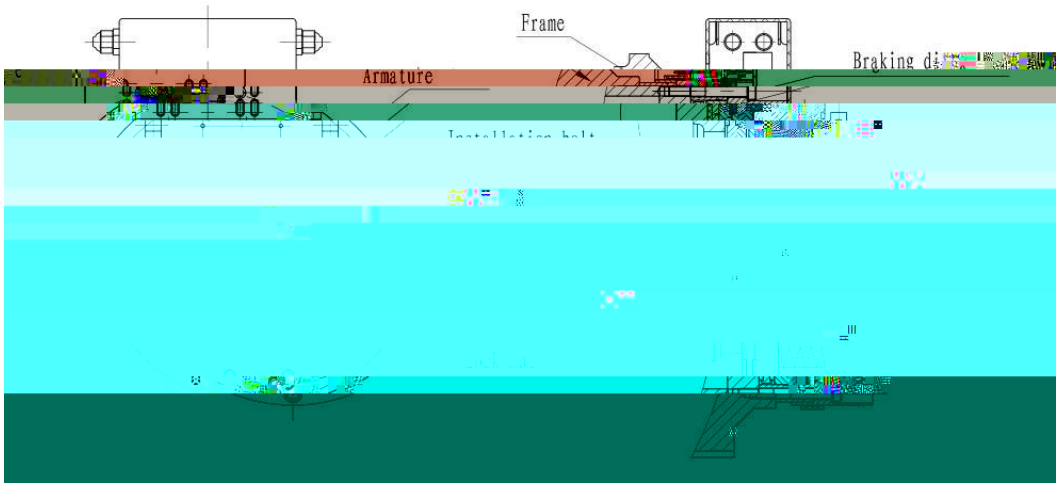

Figure 1.2

3. Adjustment of the stroke

The air gap of brake is fixed and there is no need to be adjusted.

4. Notice

[1] When adjust the bolts, you should adjust it diagonally.

[2] Screw all four bolts down, every bolt must be 60 Nm locked.

[3] When adjusting the bolts, the adjust range must be as small as possible, after installation, check the air gap

and the gap between friction plate and the base installation surface with feeler gauge .

[4] at the releasing bolt.

[5] Brake installed in the ventilation, shelter and avoid direct sunlight to brake, effectively avoid oil into the rooms of the brake, Brake effectively grounded; Check the brake clearance, inspection release can perform the brake and release, check whether the micro switch is correct.

[6]When the adjustment is over, you should do test to check the braking force (such as the elevator static load test), lock all the adjusting points, make corresponding markers before put into operation.

5. Problems and solution of the brake

[1] The braking system doesn t work

a)The winding voltage of the braking system in the field is too low

Check braking system power supply voltage electrical connection

b)The brake coil is broken

Replace the corresponding brake

[2] Braking torque doesn t meet the requirements

Unclean friction plate and motor base installation surface

Clean all friction surface and involved parts.

[3] There is no feedback braking system

Micro switch is broken.

Change the micro switch

6. Installation and debugging of the lever of the brake micro switch

NOTICE: The stroke of the lever and the micro switch contact has been adjusted well before shipping. It does not need to readjust normally. If it needs to be adjusted, please call professional personnel.

7. Manual releasing device

When there are problems while the elevator running or the persons are kept in the car for the power off, you may use manual releasing device to operate.

NOTICE: The manual releasing device should be operated by 2 professionals, and make sure the power is shut down first.

Usage of the manual releasing device:

One person use accessary spanners of machine respectively put each spanner on both camshafts, then move the force spanner as shown in the following figure, the brake can be released. Refer to figures 1.3 and 1.4.

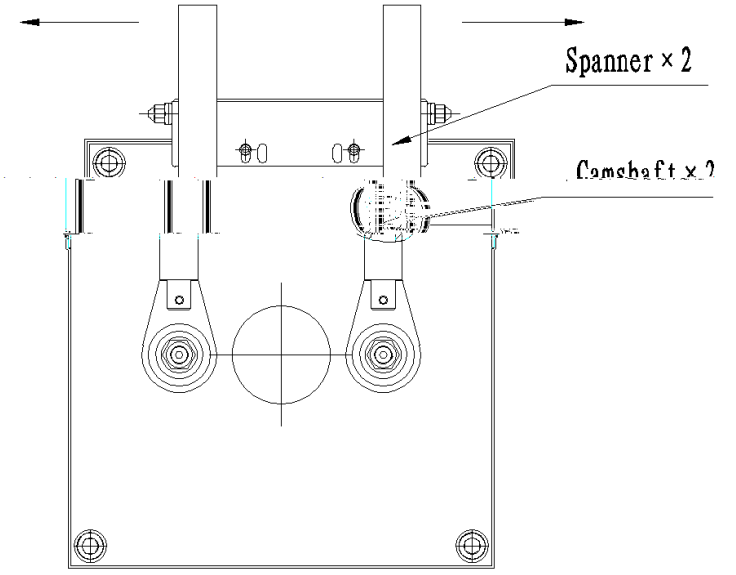

Figure 1.3

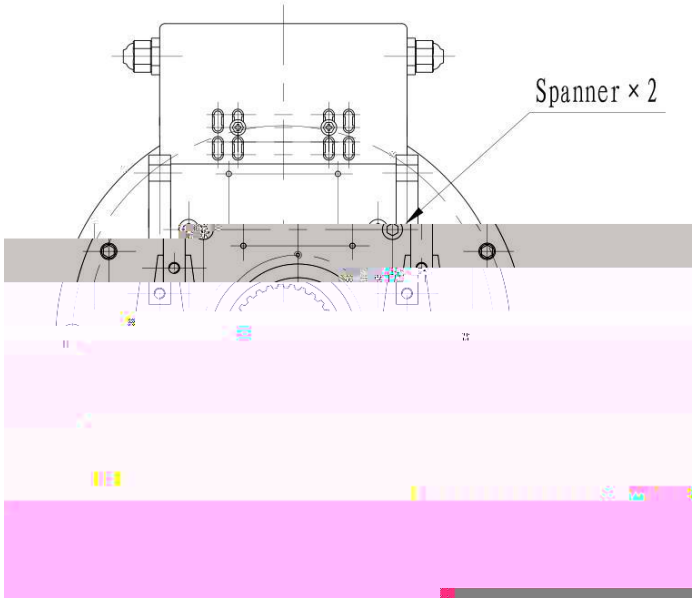

Figure 1.4

8. Remote release device

When the elevator is installed without the machine room, it is necessary to use the remote release device for emergency operation when the elevator is in the process of operation, or because of power failure caused by the situation.

Note: The handle should be installed in a safe location, can only be operated by professional personnel, ensure the operation cut off the main power supply, to strictly prevent the brake opened causes the elevator to slip danger.

When installing a remote release device, the brake shall not be adjusted without permission;

Remote release device has been adjusted, no special circumstances do not adjustment have fixed on the brake device of the machine

1. Remote release device and the main parts

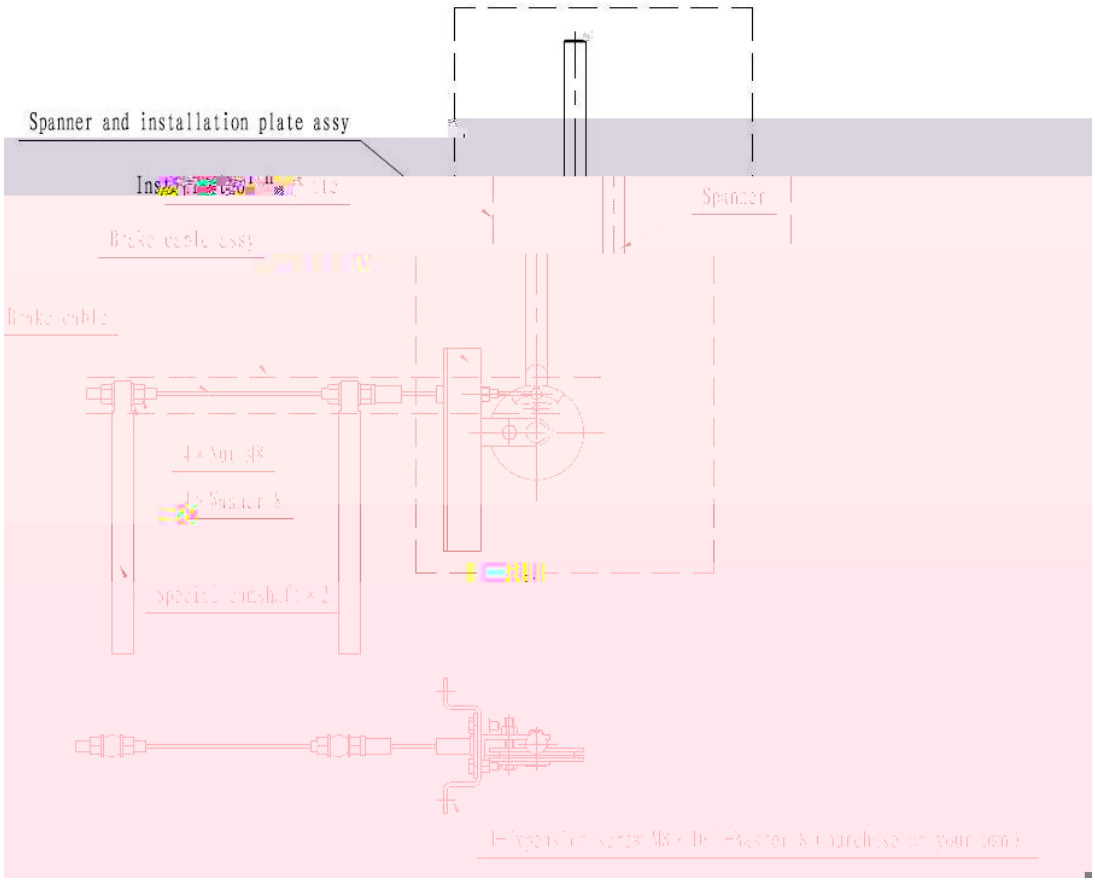

Figure 1.5

2. The remote release device profile

When the microswitch is used for 8 years or accidentally damaged, it needs to be replaced with a new microswitch.

When the brake has been used for 8 years or 5 million times, it needs overall inspection and maintenance.

When the brake is used for 15 years or abnormally damaged, it needs to be replaced with a new brake.

NOTICE! The static load test method: add 150% rated load in the car, observe the base installation surface for ten minutes, there should have no skid between the braking disc and the installation surface.

WARNING! If the braking force test is unqualified, then the elevator is forbidden to be electrified, otherwise it would occur accidents.